RS75-4 3" Reference Full-Range Driver 4 Ohm

RS75-4

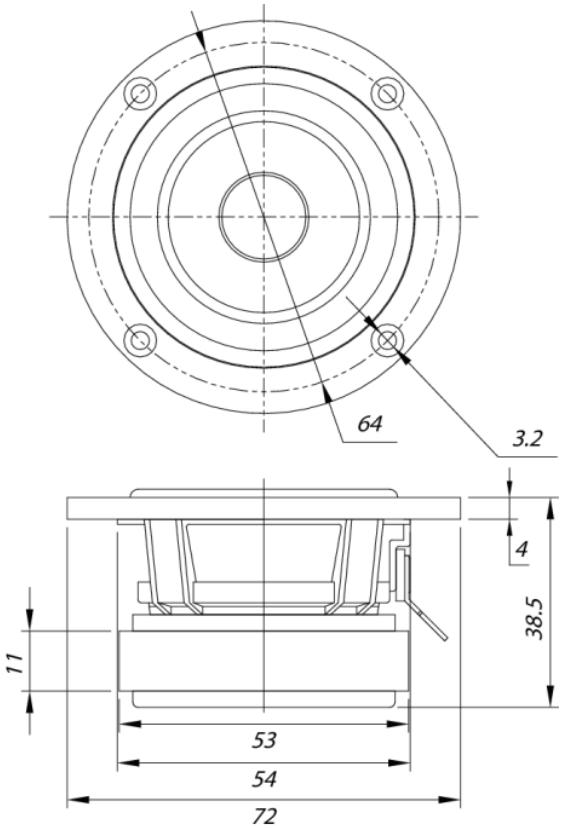

PARAMETERS

Impedance	4 ohms
Re	3.1 ohms
Le	0.72 mH @ 1 kHz
Fs	177 Hz
Qms	5.76
Qes	0.97
Qts	0.83
Mms	1.1g
Cms	0.72 mm/N
Sd	12 cm²
Vd	1.31 cm³
BL	2.01 Tm
Vas	0.14 liters
Xmax	1.1 mm
VC Diameter	16 mm
SPL	85.2 dB @ 2.83V/1m
RMS Power Handling	15 watts
Usable Frequency Range (Hz)	170 - 20,000 Hz

IMPEDANCE/PHASE

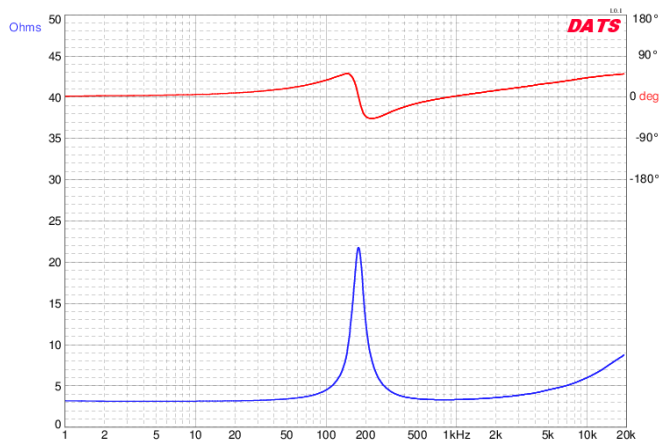

FEATURES

- Full-range performance
- Low distortion and high resolution
- Aluminum frame, aluminum cone, rubber surround
- Distortion-reducing copper ring, copper cap, and aluminum phase plug
- Subtle yet high-tech look makes a bold cosmetic statement

FREQUENCY RESPONSE

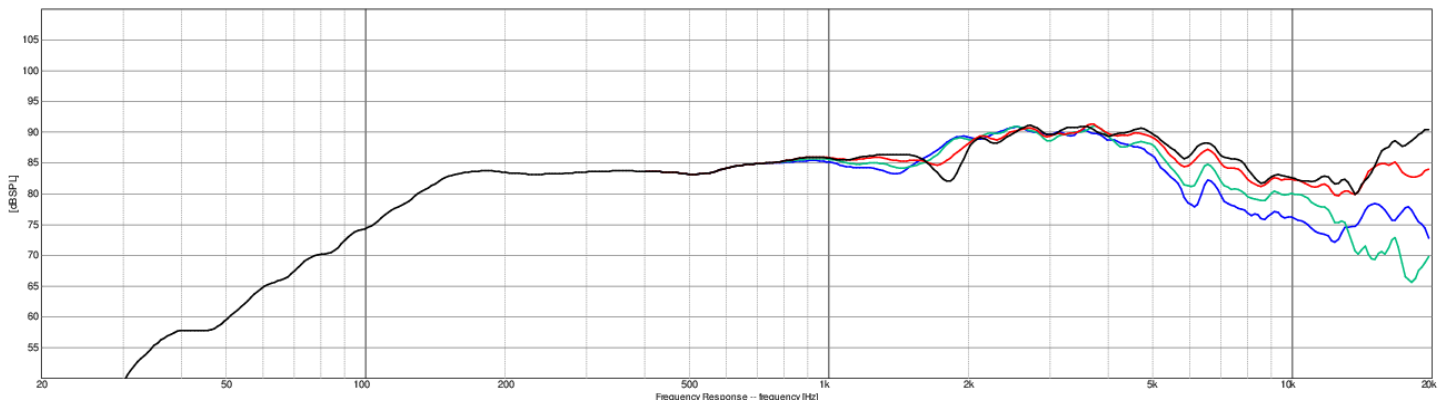

Note: 1/24th octave smoothing - nearfield response included in graph below 450 Hz.

Black = 0°
Red = 15°
Green = 30°
Blue = 45°